

Singapore’s Electricity Industry

About the Energy Market Authority (EMA)

- Formed in 2001, EMA is the lead agency for energy matters in Singapore – a statutory board under the Ministry of Trade and Industry. In addition, EMA is the economic and technical regulator of Singapore's electricity and gas industries.

Mission

To Forge a Progressive Energy Landscape for Sustained Growth

Key Policy Objectives

A Secure Energy Supply: Power System Operation	A Competitive Energy Market: Regulation	A Dynamic Energy Sector: Energy Planning & Development
• Reliability • Security • Stability	• Electricity • Gas • District Cooling	• Planner • Promoter • Development

Reform of Singapore's Electricity Industry

- Singapore's electricity industry had traditionally been vertically integrated and Government-owned.

- Restructuring of electricity industry began in 1995, and continued through 2000, where the government decided to press on with further liberalisation of the electricity industry and obtain the full benefits of competition.

Key Initiatives for Restructuring:

- Clear separation of competitive businesses (contestable) from natural monopolies (non-contestable) to ensure level playing field; and

- Open access to monopoly infrastructure.

Electricity Industry Structure

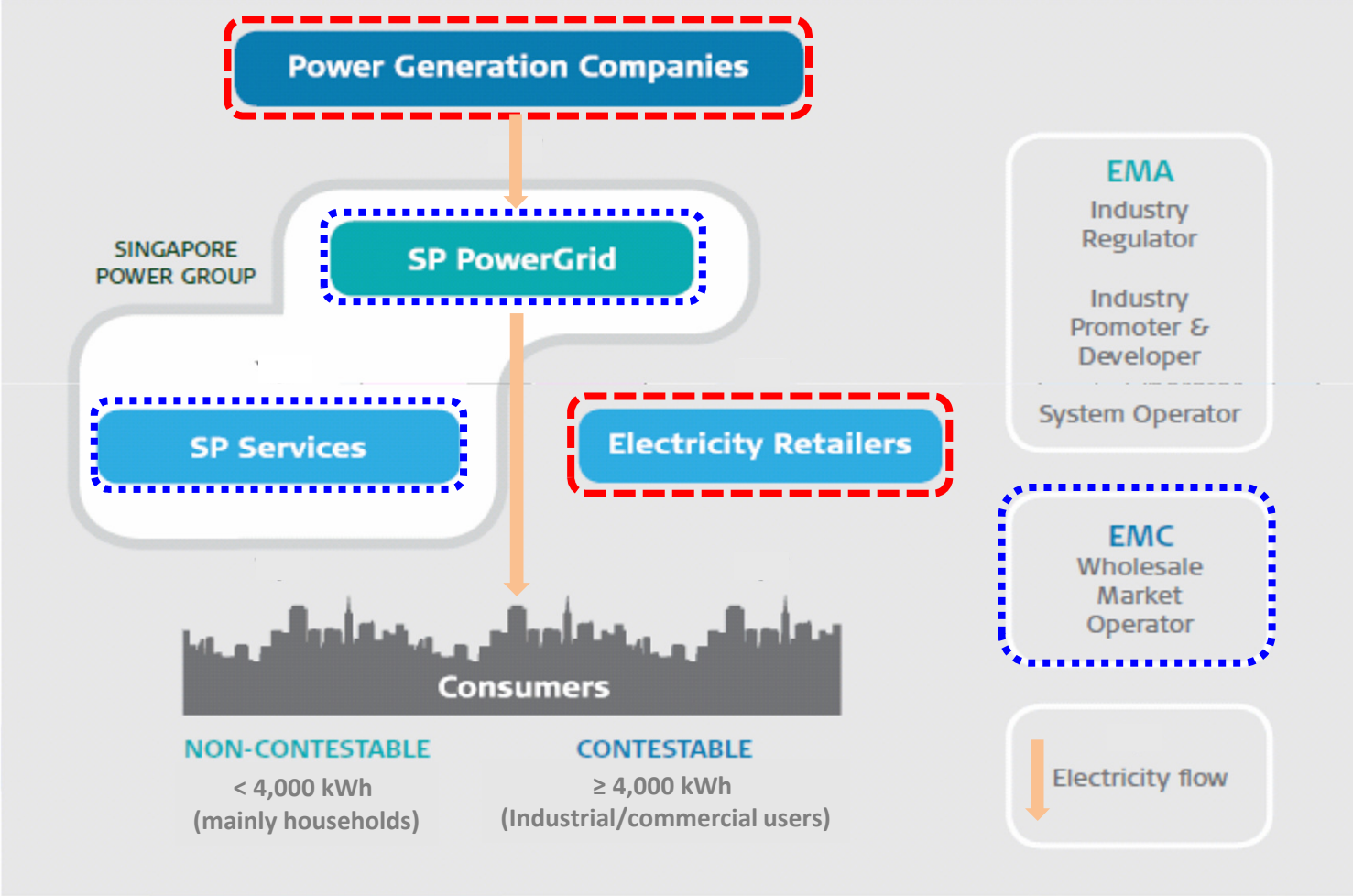

Non-Contestable Sector Contestable Sector

Generation Capacity

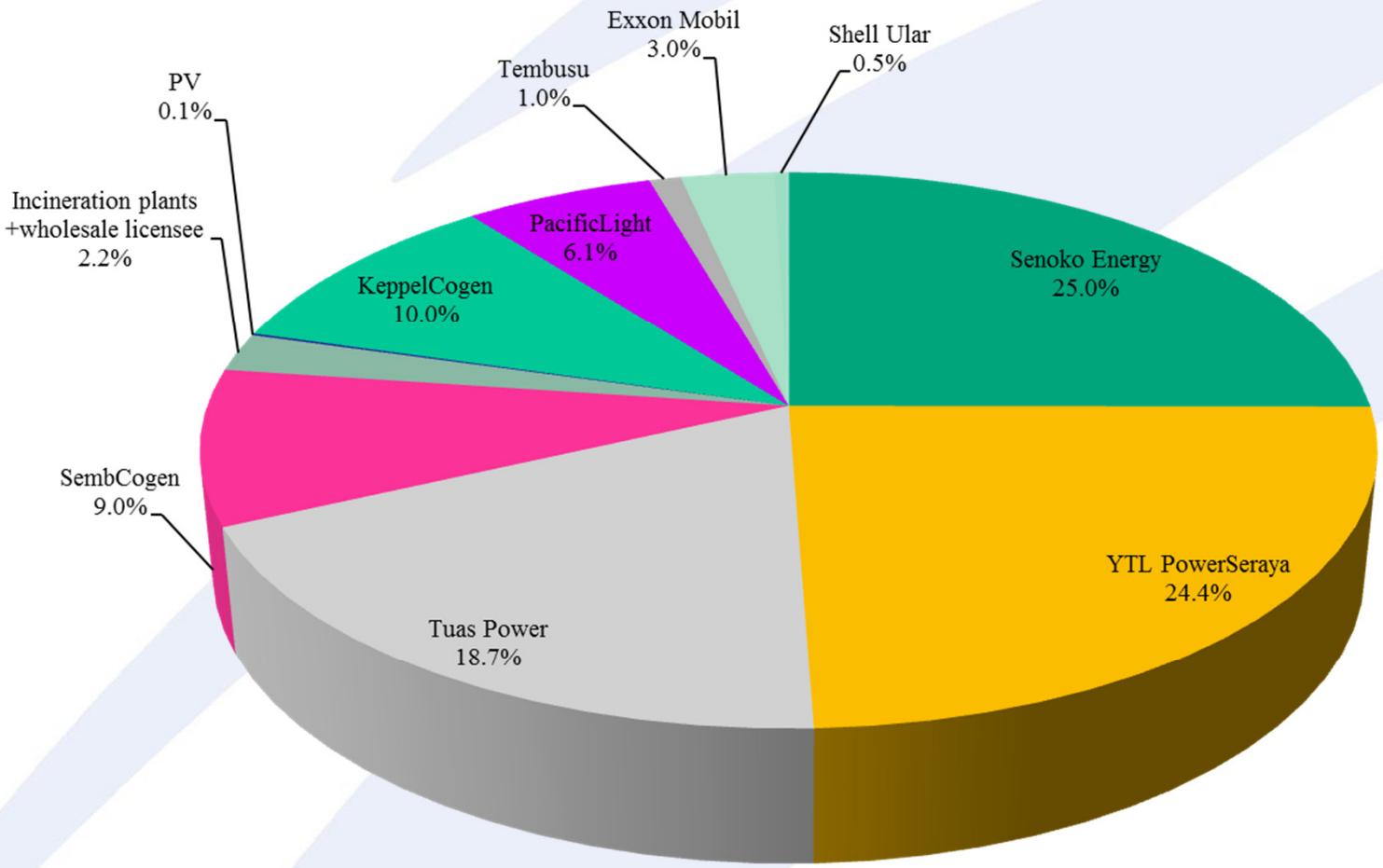

Installed capacity = 13,208 MW

Typical Daily System Demand

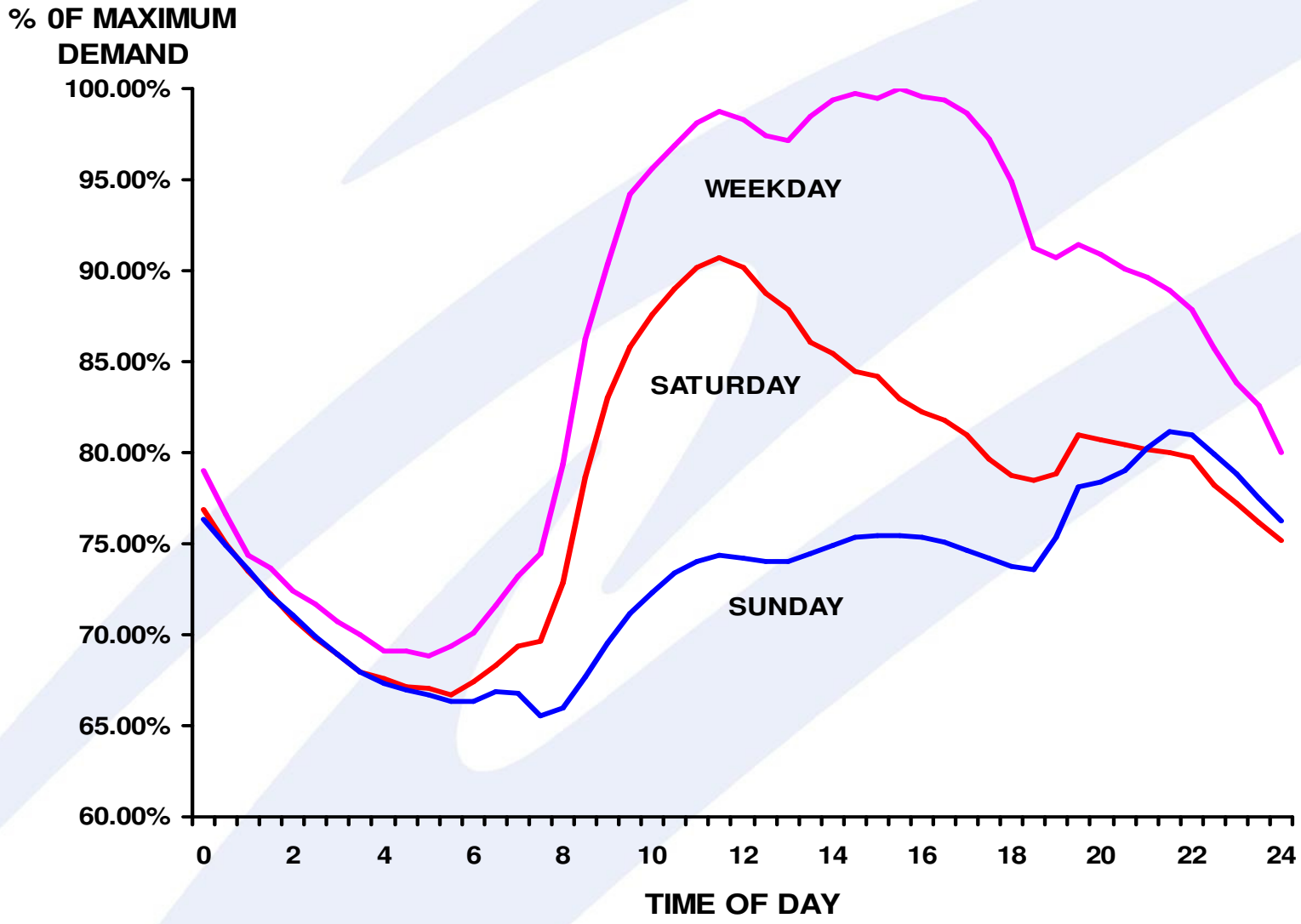

Monthly Peak Demand Profile

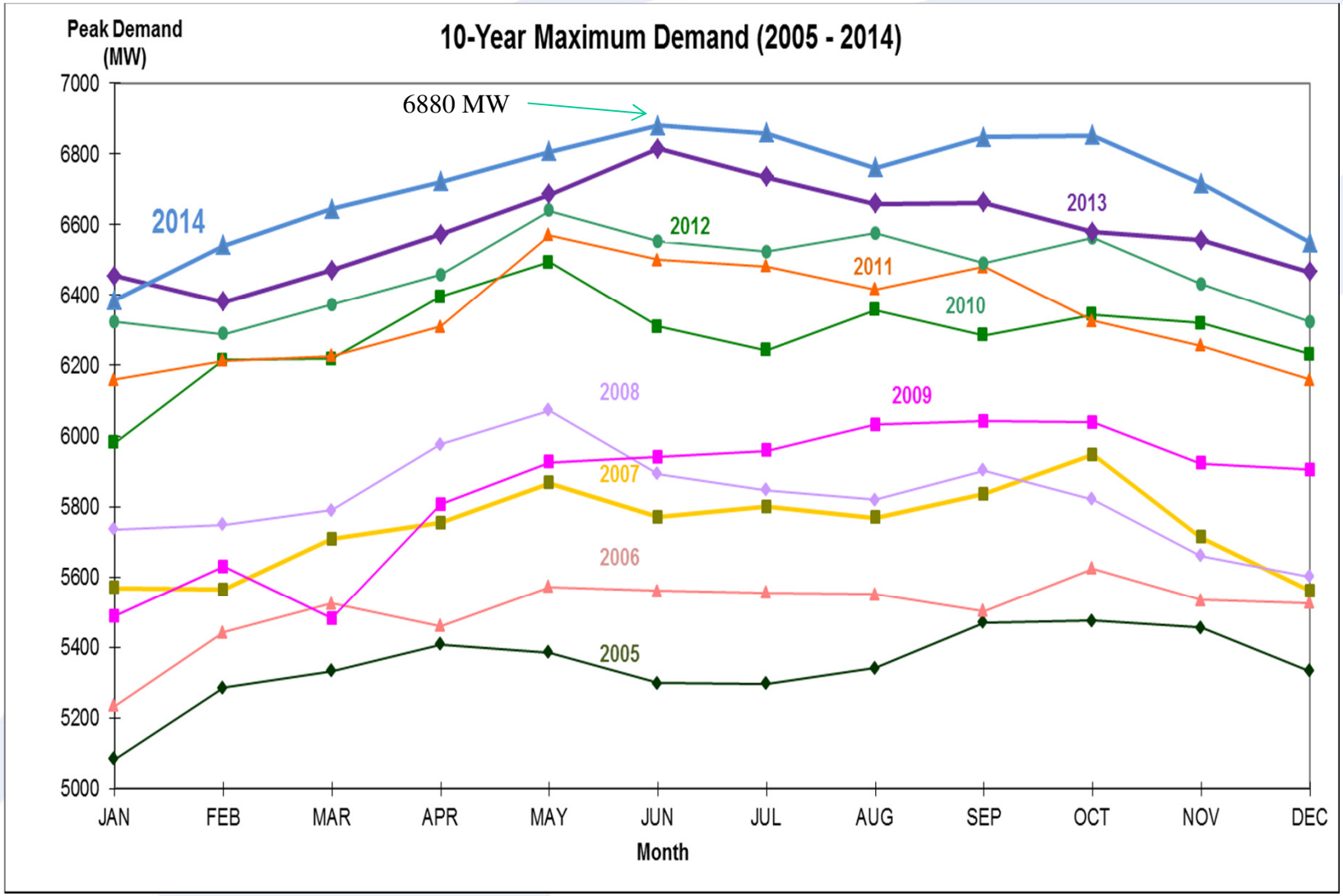

Power System Overview

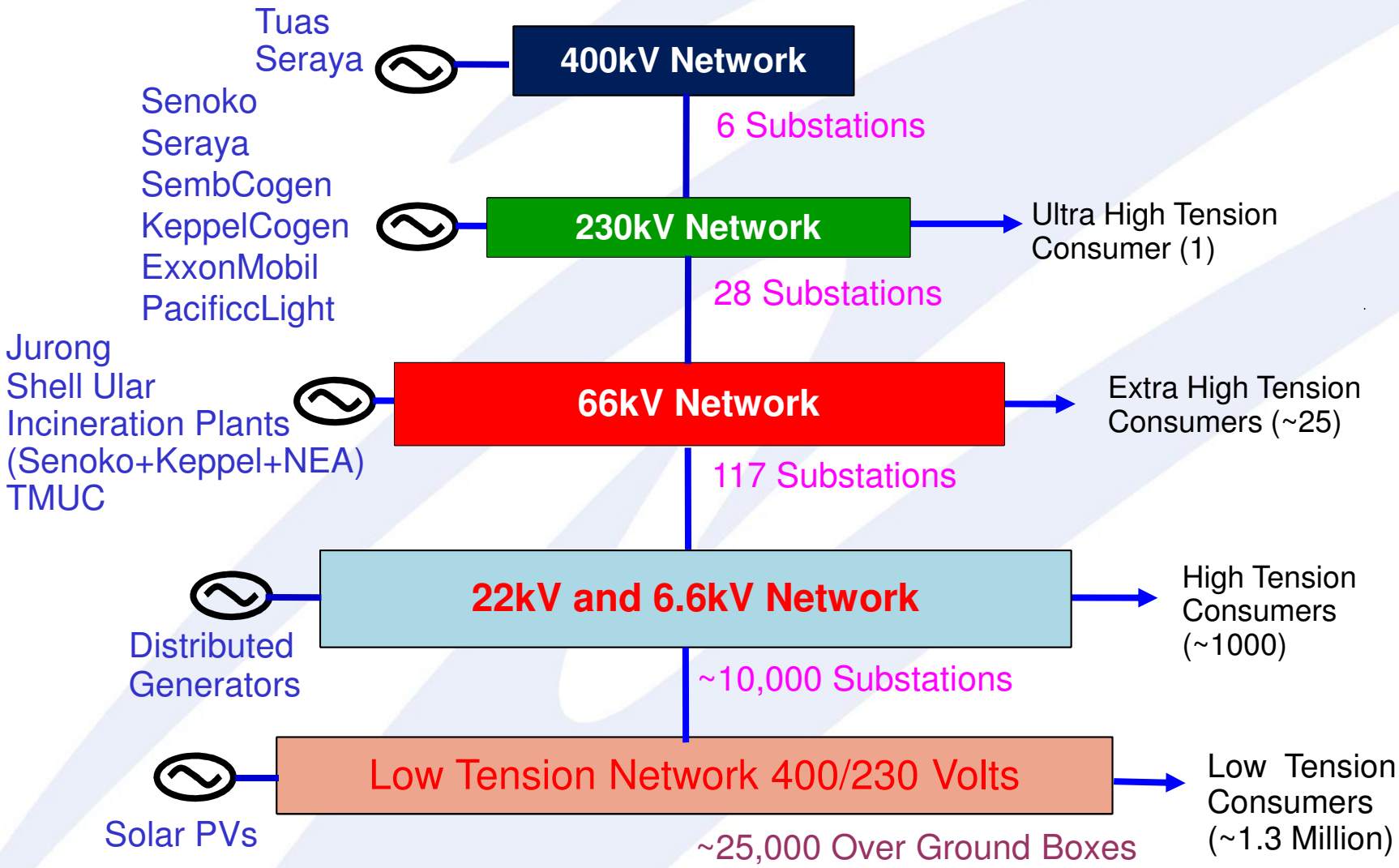

Transmission & Distribution System

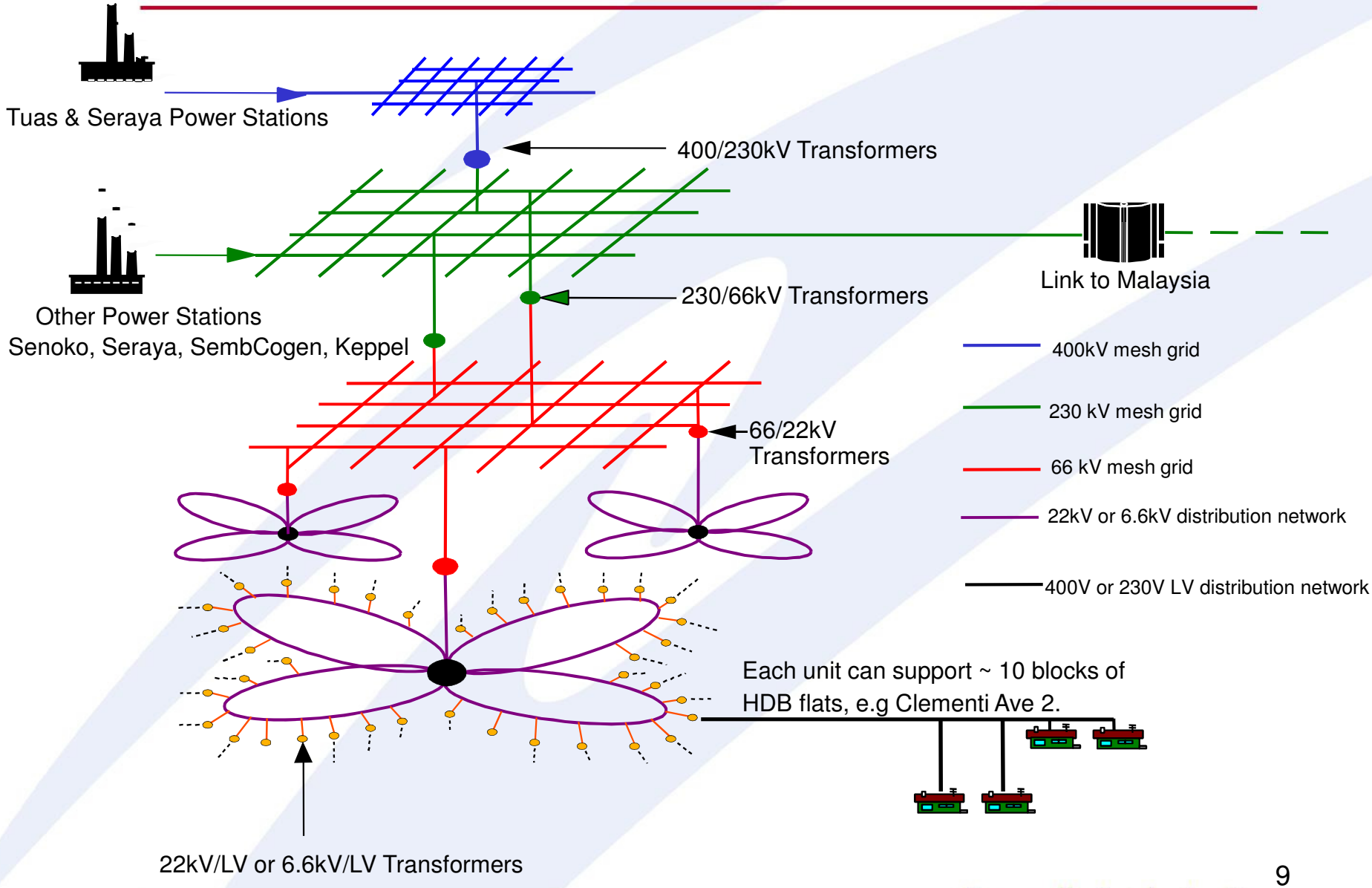

EMA/ PSO Functions

- Responsible for secure operation of the Power System
- Operates from the Power System Control Centre
- Round the clock monitoring and controlling the electricity transmission system and generators
- Oversee real-time operation of gas transmission system
- Activate contingency plans and coordinate emergency responses of gas/power licensees when the need arises
- Assess generating plants design & performance
- Assess electricity & natural gas systems development plan

PSO functions in the Market

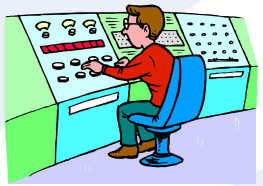

1. Sanction Overhaul/Maintenance request
2. Provide Network Status, Outage Schedules & Load Forecast to EMC
3. Dispatch Generating Units according to EMC schedule
4. Sanction Startup/Shutdown of Generating Units
5. Dispatches Ancillary Services
6. Takes full control in times of Emergency
7. Provides Adequacy & Security Assessments to Market
8. Monitor & report non-compliance to dispatch instruction

Scheduling of Generating Units

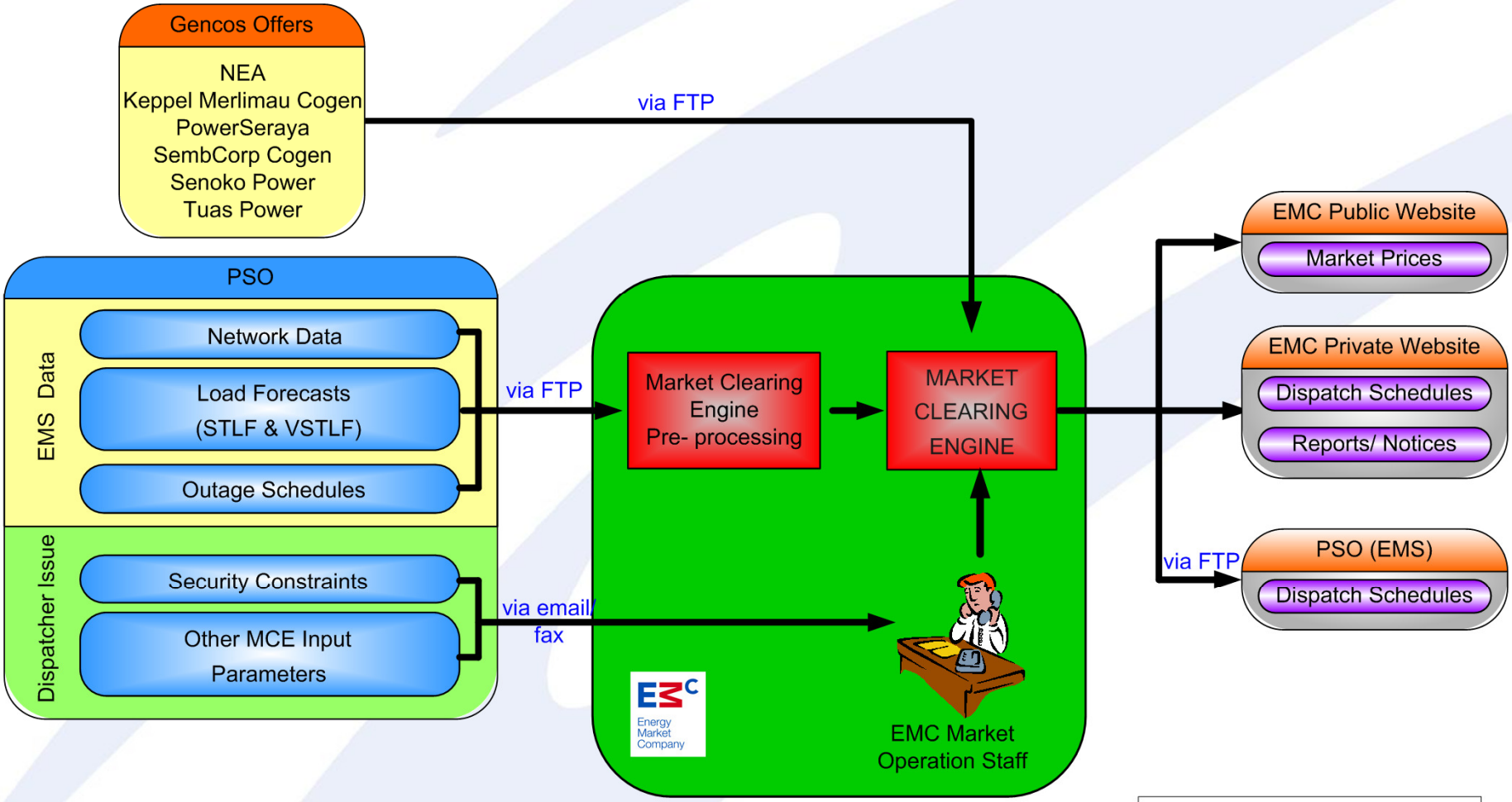

Dispatch Schedules includes
RTD, STS, PDS and MOS

Market Work Flow

- PSO produces forecast of demand for energy and reserve and sends it to the EMC
- PSO extracts current network condition and send these to EMC
- Market Participants offer Energy, Reserve and Regulation
- EMC produce Dispatch Schedule using Market IT System
- EMC sends Dispatch Schedule to PSO
- EMC publishes Dispatch Schedules
- EMC publishes Market Clearing Prices to Participants
- PSO dispatches Energy and Reserve using MCE Schedule of Energy, Reserve and Regulation
- PSO monitors compliance with dispatch instructions
- Market Assessment Unit (MAU) monitors compliance with market rules, manuals
- MSSL collects and adds up Meter Data
- EMC pays Metered Energy at the Market Price

NEMS Dispatch Schedules

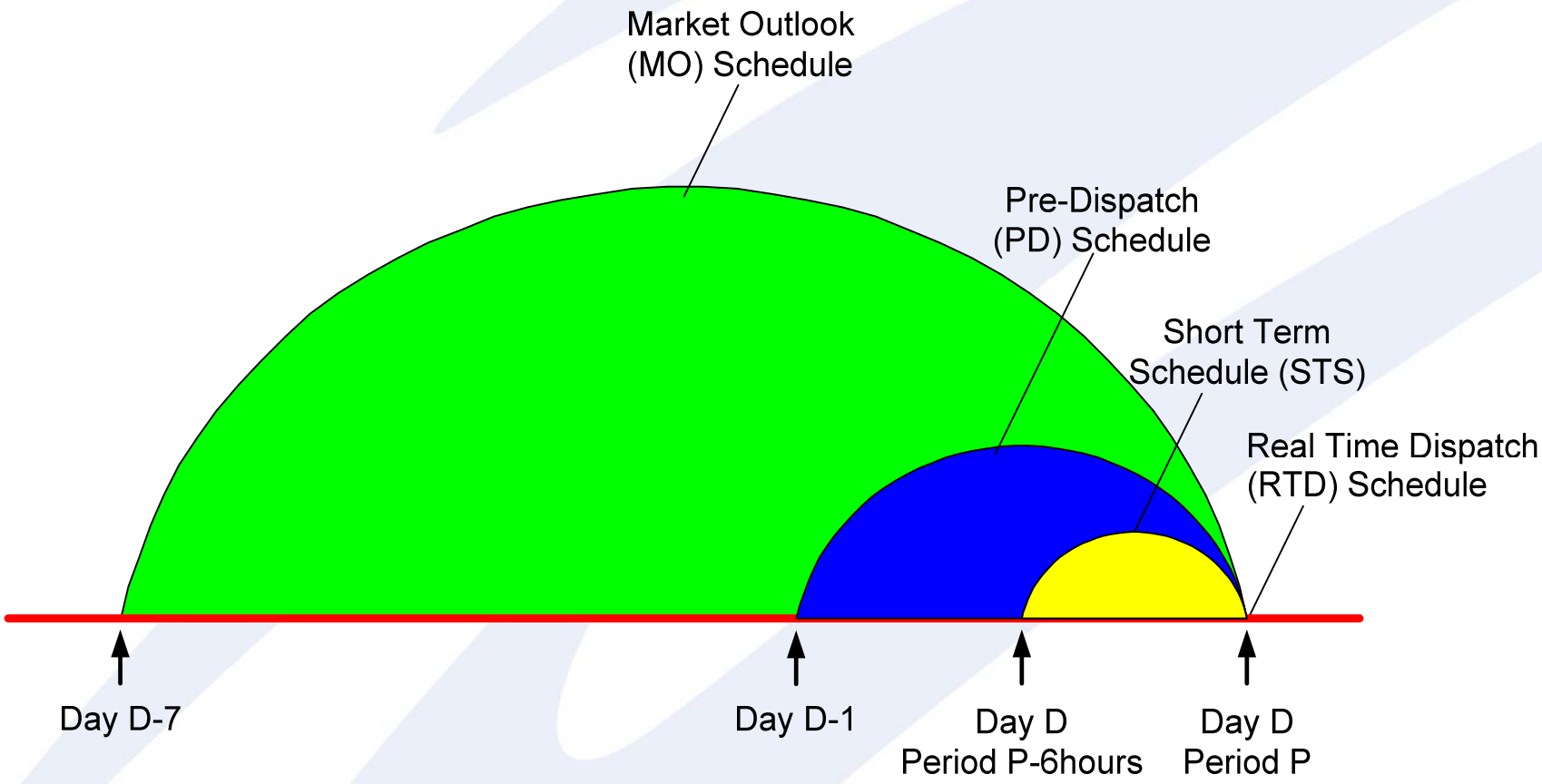

Each Period P-30min

REGULATORY FRAMEWORK

Key Regulatory Objectives

- Level Playing Field
- Transparent rules and consistent application of rules
- Open access
- Low entry and exit barriers

Regulatory Approach

Contestable Sector

(Power Generation Companies and Electricity Retailers)

- Clear and transparent regulatory regime
- Rely on market signals
- Ensure level playing field
- Low barriers of entry

Non-Contestable Sector

(Natural Monopolies)

(Transmission/Grid Operator, Market Support Services and Wholesale Market Operator)

- Regulate revenue of monopolies
- Incentivise efficient behaviour
- Open access

Competition in Contestable Sector

- In the electricity generation and retail businesses, companies compete with one another for dispatch and customers. By keeping the market competitive, these companies should be unable to raise price at the detriment of consumers.

- However, there are three large Gencos in the electricity generation business. As such, EMA introduced the Vesting Contracts to curb the potential exercise of market power.

Mitigating Market Power

- Introduced in 2004 as a regulatory instrument to curb the potential exercise of market power by the gencos. Specifically, Vesting Contracts:
  - ✓ Commit gencos to sell a specified amount of electricity (viz. Vesting Contract level) at a specified price (viz. Vesting Price).
  - ✓ Removes incentive for gencos to withhold capacity to bid up spot prices in the wholesale electricity market.

- Vesting contract level and price reviewed every two years:
  - ✓ Vesting contract level is set based on projected demand and supply at the point of review and using a game theoretic simulation model to simulate non-collusive interactions among the gencos.
  - ✓ Vesting price is set based on the long run marginal cost (LRMC) of the most efficient generation technology that accounts for at least 25% of our system demand.

Economic Regulation of Non-Contestable Sector

- Transmission and Grid Operator, Market Support Services and Wholesale Market Operator are natural monopolies. These companies have the potential to raise price and restrict the quantity/quality of goods and services offered.

Example: SP PowerAssets (SPPA)

- ✓ SPPA is the entity that owns the national electricity transmission system used to transmit electricity from gencos to consumers.

- ✓ Consumers pay grid charges (also known as UOS charges) to SPPA. Consumers connected at HT and above need to contract for capacity with SPPA and pay contracted capacity charges.

- ✓ SPPA's average grid charges are regulated by EMA and are determined under its 5-year regulatory framework.

Price-Regulation Framework

- Building Block approach
- Allowed Revenue = operating costs + depreciation + taxes + allowed return
- Incentive mechanism to incentivise efficient behaviour
- 5-year Regulatory period - Parameters are fixed during the 5-year period.

Results of Market Liberalisation

- Competition has motivated gencos to **switch from oil-fired steam plants to more cost efficient gas-fired plants**. As a result, while average oil prices in Q4 2014 are about six times higher compared to the average fuel price in 1995, electricity tariff in Q1 2015 has only risen by about 70%.

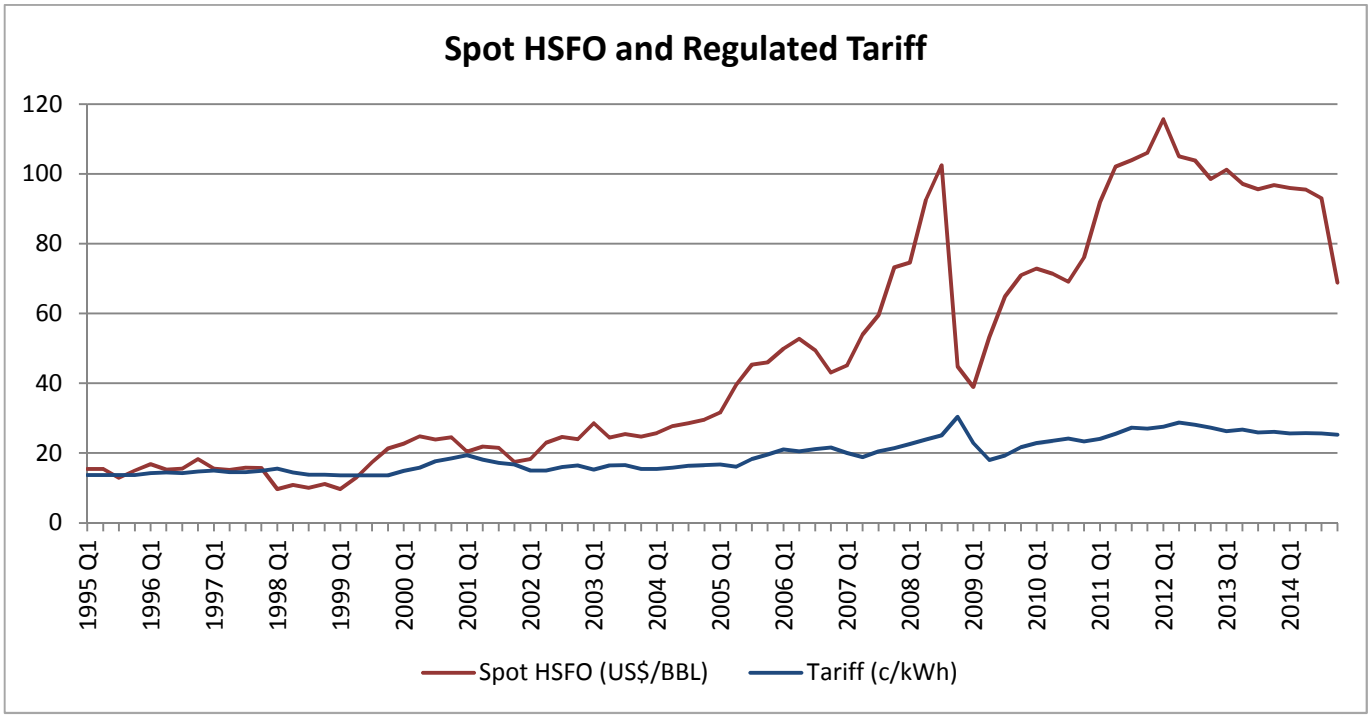

Results of Market Liberalisation

- Liberalisation of the electricity market has also seen **consumers benefit from greater choice of retailers, and pricing plans**. Today, around 80% of demand have retail choice, and we are working on how to let the remaining 20% also enjoy the benefits of competition.

- In the monopoly sector, regulation has also brought about lower rates, while **maintaining the high performance of the grid**.